SUBDIVISION REGULATIONS

BEAN STATION, TENNESSEE

Adopted: January 26, 1998
As Amended Through August 8, 2010

SUBDIVISION REGULATIONS

BEAN STATION, TENNESSEE

Prepared by the

BEAN STATION MUNICIPAL PLANNING COMMISSION

Adopted: January 26, 1998
As Amended Through August 8, 2010

Amendments of this document made subsequent to adoption will be incorporated into its text and inserted following the Appendices

TABLE OF CONTENTS

ARTICLE		PAGE
I.	PURPOSE, AUTHORITY, AND JURISDICTION	
	A. Purpose	1
	B. Authority	1
	C. Jurisdiction	1
II.	PROCEDURE FOR PLAT APPROVAL	
	A. General	3
	B. Preliminary Plat	4
	C. Final Plat	7
III.	GENERAL REQUIREMENTS AND MINIMUM STANDARDS OF DESIGN	
	A. Streets	13
	B. Blocks	18
	C. Lots	18
	D. Public Use and Service Areas	20
	E. Suitability of the Land	21
	F. Land Subject to Flooding	21
	G. Large Tracts or Parcels	21
	H. Variances	21
	I. Planned Unit Developments	22
	J. Zoning or Other Regulations	22
IV.	DEVELOPMENT PREREQUISITE TO FINAL APPROVAL	
	A. Monuments or Corner Markers	23
	B. Stormwater Management	23
	C. Street Design Standards	25
	D. Sidewalks	29
	E. Installation of Utilities and Driveways	30
	F. Water Supply System	30
	G. Sanitary Sewers	30
	H. Street Name Signs and Regulatory Warning Signs	30
	I. Requirements for Acceleration and Deceleration Lanes	30
	J. Electric Transmission Lines	30
	K. Street Lights	31
	L. Guarantee in Lieu of Completed Improvements	31
	M. Maintenience/Warranty Bond	32
V.	ENFORCEMENT AND PENALTIES FOR VIOLATIONS	
	A. General	33
	B. Enforcement	33
	C. Penalties	33
VI.	ADOPTION AND EFFECTIVE DATE	35

TABLE OF CONTENTS
continued

APPENDIX I. CEMENT CONCRETE CURBING AND SIDEWALKS 39

APPENDIX II. STREET TESTING SCHEDULE 43

ILLUSTRATIONS

ILLUSTRATION 1 REINFORCED CONCRETE FLARED END SECTION (TYPICAL) 47

ILLUSTRATION 2 CULVERT HEADWALL DETAIL 49

ILLUSTRATION 3 TYPICAL ROADWAY SECTION 51

Amendments included in this document:

Resolution 00-01 amending Article III, C., 2.
Public hearing held June 26,2000

Resolution 2002-01 amending Article II, C., 3.b.
Public hearing held June 24, 2002

Resolution 2008-08 amending Article IV, C., 6.
Public hearing held August 25, 2008

Resolution 2010-08 amending Article IV, M.
Public hearing held January 25,2010

ARTICLE I

PURPOSE, AUTHORITY, AND JURISDICTION

A. *Purpose*

Land subdivision is an important process in community development. The manner in which property is divided into lots and provided with public services and access effects both the persons who purchase such lots for homes and businesses and the general community. Therefore, the purpose of these regulations is to establish minimum standards of design in order to insure that the subdivision of land into lots is accomplished in a manner consistent with community development policies.

B. *Authority*

These subdivision regulations are adopted and may be amended under authority granted by Sections 13-4-301 through 13-4-309, Tennessee Code Annotated. The planning commission has fulfilled the requirements set forth in this act as prerequisite to the adoption of such regulations. A certified copy of the major road plan for the City of Bean Station is on file in the office of the Register of Deeds of Grainger County, Tennessee.

C. *Jurisdiction*

These regulations shall govern the division of all property meeting the definition of "subdivision" which lies within the corporate limits of Bean Station, Tennessee. In accordance with 13-4-301, Tennessee Code Annotated, the following divisions of property are considered to be subdivisions and therefore must meet the provisions of these regulations: a division where one (1) or more of the resulting lots is less than five (5) acres in size; divisions where a new means of access or public water or public sewer is required, regardless of the size of any or all or the lots; further division of lots created by previous subdivision activity; and rearrangement of lot lines, easements, rights-of-way, and similar changes to previously recorded plats. Any owner of land within the city wishing to subdivide land shall submit to the planning commission a plat of the subdivision prepared in accordance with applicable provisions of Articles II, III, and IV of these regulations. Questions regarding whether or not proposed land division activities are subdivisions should be directed to the planning staff.

ARTICLE II

PROCEDURE FOR PLAT APPROVAL

A. *General*

1. Any owner of land lying within the area of jurisdiction of the planning commission who wishes to subdivide such land, as defined in Article I, C, for the purpose, whether immediate or future, of sale or building development, shall submit a plat of such proposed subdivision to the planning commission for approval and shall obtain such approval prior to the filing of the subdivision plat for record. Any such plat of subdivision shall conform to the minimum standards of design for the subdivision of land as set forth in Article III of these regulations and shall be presented in the manner specified in the following sections of this Article. No plat of a subdivision of land within the area of planning jurisdiction shall be filed or recorded by the county register without the approval of the planning commission as specified herein.

2. The procedure for review and approval of a subdivision plat consists of two (2) separate steps. Prior to beginning grading or other earthmoving activities related to site preparation, street, utility, or other improvements, the subdivider shall submit a preliminary plat to the planning commission. The preliminary plat shall be prepared in accordance with Section B of this Article. Upon approval of a preliminary plat, the subdivider may proceed with site preparation and construction of improvements. At such time as all required improvements have been installed or appropriate security provided to guarantee the installation of such improvements, the subdivider may present a final plat to the planning commission. The final plat shall be prepared in accordance with Section C of this Article. Upon receiving final approval and the certifying signature of the planning commission secretary, the subdivider may record the plat in the office of the county register of deeds and may thereafter sell, transfer or otherwise negotiate for the sale of property within the subdivision.

B. ***Preliminary Plat***

1. At least ten (10) days prior to the meeting at which it is to be considered, the subdivider shall deliver to the planning staff four (4) copies of a preliminary plat of the proposed subdivision drawn to a scale of not less than one (1) inch equals one hundred (100) feet. ***A preliminary plat shall not be acceptable for submission unless it meets all the required standards of design and unless it contains all the required information or a written request for a variance from each specific deviation from the requirements with reasons therefor.***

2. The preliminary plat shall meet the minimum standards of design as set forth in Article III and the general requirements for the construction of public improvements as set forth in Article IV and shall include the following information:

   a. The proposed subdivision's name and location, the name(s) and address(es) of the owner(s), and the name of the designer of the plat who shall be an engineer or registered surveyor.

   b. Date, approximate north point, and graphic scale.

   c. The location of all existing property lines, streets, buildings, water courses, railroads, sewers, bridges, culverts, drain pipes, water mains, and any public utility easements or lines, detention basins, the zoning classification of the land to be subdivided and of the adjoining land, and the names of adjoining property owners or subdivisions.

   d. Plans of proposed utility layouts (sewers, water, gas, fire hydrants, street lights, and electricity) showing feasible connections to the existing or any proposed utility systems. When such connections are not practicable, the plat shall note that individual water supply and/or sewage disposal systems are proposed.

   e. Erosion control and drainage plan prepared by an engineer or landscape architect. (see Article IV, B, 1)

f. The proposed locations, dimensions, and names of proposed streets, easements, parks, and other open space reservations, lot lines, building setback lines, and utilities. Profiles of all streets showing the natural and finished grades drawn to a scale of not less than one inch equals twenty (20) feet vertical shall be required.

g. Contours at vertical intervals of not more than five (5) feet. At the discretion of the planning commission, subdivisions containing less than five (5) acres or ten (10) lots may provide contours at a greater interval.

h. The total acreage of the land to be subdivided and the approximate area of each lot.

i. Location map showing relationship of subdivision site to the surrounding area.

j. If any portion of the land being subdivided is subject to flood as defined in Article III, Section F, the area subject to flood shall be shown and all applicable provisions of the Bean Station flood damage prevention ordinance met. (see also, Article III, A, 4)

3. A subdivider may omit the submission of a preliminary plat, submitting only a final plat if all the following conditions are met:

a. The proposed subdivision does not contain more than five (5) lots.

b. All public improvements as set forth in Article IV are already installed or because of the nature of the development deemed not necessary by the planning commission. Any construction, installation, or improvement of any public improvements shall require submission of a preliminary plat as prescribed by Section B above.

c. The subdivider has consulted informally with the planning commission and/or planning staff for advice and assistance before preparation of a final plat and its formal application for approval.

4. Within thirty (30) days after the planning commission meeting at which a preliminary plat is considered, the planning commission shall approve or deny approval of the plat or approve the plat subject to modifications. If the plat is approved subject to modifications, the nature of the required modifications shall be set out in the minutes of the commission, or if approval is denied, reasons for denial shall be similarly stated in the minutes of the commission.

5. One (1) copy of the preliminary plat shall be retained in the planning commission files, one (1) copy shall be provided to the planning staff, and one (1) copy shall be returned to the subdivider at the time of approval or denial with any notations as to required changes, if any.

6. Upon approval of the preliminary plat, the subdivider may proceed with the installation of public improvements. A revised preliminary plat shall be submitted to the planning commission for approval should any substantial changes be proposed to the subdivision following preliminary plat approval. Substantial changes shall be, but shall be not limited to, changes in location of street right-of-way, decrease or increase in waterline size, or changes in location or capacity of stormwater management facilities.

7. Approval of the preliminary plat shall not be construed as assuring approval of the final plat.

8. The approval of the preliminary plat shall lapse unless a final plat based thereon is submitted within twelve (12) months from the date of such approval unless an extension of time is applied for and granted by the planning commission.

C. ***Final Plat***

1. At least ten (10) days prior to the meeting at which it is to be considered, the subdivider shall deliver to the planning staff four (4) copies of the final plat drawn to a scale of one (1) inch equals one hundred (100) feet on sheets no larger than 18 x 24 inches in size. When more than one sheet is required, an index sheet shall be provided. The final plat shall conform substantially to the preliminary plat as approved, and, if desired by the subdivider, it may constitute only that portion of the approved preliminary plat which the subdivider proposes to record and develop at the time, provided however, that such portion conforms to all requirements of these regulations. ***A final plat shall not be acceptable for submission unless it contains all of the required information or a written request for a variance from each specific deviation from the requirements with reasons therefor.***

2. The final plat shall show:

   a. The lines of all streets and roads, alley lines, building setback lines, lots numbered in numerical order, lot areas, reservations for easements, and any areas to be dedicated to public use or sites for other than residential use with notes stating their purpose and any limitations.

   b. Sufficient data to determine readily and reproduce on the ground the location, bearing, and length of every street line, lot line, boundary line, block line, and building line, whether curved or straight, and including true north point. This shall include the radius, central angle and tangent distance for the centerline of curved streets and curved property lines that are not the boundary of curved streets.

   c. All dimensions to the nearest one hundredth (100th) of a foot and angles to the nearest minute.

   d. Location and description of monuments. (see Article IV, A)

   e. The names and locations of adjoining subdivisions and streets and the location and ownership of adjoining unsubdivided property.

   f. Date plat was prepared, name of subdivision, name of owner(s), civil district, deed book and page number, graphic scale, and true north point.

g. Location map showing site in relation to the surrounding area.

h. If any portion of the land being subdivided is subject to flood, as defined in Article III, F, information shall be submitted, as outlined in that section of these regulations and the Bean Station flood damage prevention ordinance.

i. Street numbers, if assigned by the property numbering authority.

3. The following certificates shall be presented on the final plat: (see following page)

a. Certification showing that applicant is the land owner and dedicates streets, right-of-ways, and other sites, as may be applicable, for public use.

b. Certification by surveyor as to accuracy of survey and plat and placement of monuments. (Amended by Resolution 2002-01, 6/24/2002)

c. Certification by the utility provider that the water supply system meets requirements of the controlling state agency.

d. Certification by the county department of environmental health that the subsurface sewage disposal system(s) is approved or that the public sewerage system meets requirements of the controlling state agency.

e. Certification by the appropriate city authority and an approved independent street testing firm that all streets and appurtenances have been installed in accordance with established standards.

f. Certification for recording by planning commission secretary. The signature of the planning commission secretary shall not be placed on the plat until final plat approval has been granted and all other required certifying signatures obtained.

4. Within thirty (30) days after the planning commission meeting at which the plat is considered, the planning commission shall approve or deny approval of the plat. If the plat is denied approval, the grounds for denial shall be stated in the minutes of the planning commission. If approved, one (1) copy shall be retained in the planning commision files and one (1) copy shall be provided to the planning staff.

5. Approval of the final plat by the planning commission shall not constitute the acceptance by the public of the dedication of any street or other public way or ground. ***The subdivider shall be responsible for obtaining from the city's governing body its formal acceptance of any public street or other facility.***

Examples for each of the certification forms are provided below:

SUBDIVISION CERTIFICATION FORMS

1. ***CERTIFICATION OF OWNERSHIP AND DEDICATION***

This is to certify that the owner(s) of the property shown and described hereon hereby adopt this subdivision plat and dedicate all streets, alleys, walks, parks, or other public ways and open space to public or private use as noted.

_____ _____

Date Owner(s)

2. ***CERTIFICATION OF ACCURACY OF SURVEY***

I certify that the plat shown and described hereon is a true and correct survey to the accuracy required by the Bean Station Municipal Planning Commission, and, that monuments have been placed as shown hereon in accordance with the specifications of the Bean Station Municipal Planning Commission.

_____ _____

Date Surveyor/Engineer

3. ***CERTIFICATION OF APPROVAL OF WATER SYSTEMS***

I certify that the water system installed, or proposed for installation along with the financial guarantee provided, fully meets requirements of the State of Tennessee.

_____ _____

Date Authorized Representative of Utility Provider

4a. ***CERTIFICATION OF SEWERAGE SYSTEM (public or community system)***

I certify that the sewage disposal system installed, or proposed for installation along with the financial guarantee provided, fully meets the requirements of the State of Tennessee and is approved as shown with all restrictions/conditions as noted. (not required if 4b is applicable)

_____ _____

Date Authorized Signature of Utility Provider

4b. ***CERTIFICATION OF SUBSURFACE DISPOSAL (septic system)****

Subdivision is approved for subsurface sewage disposal. Owner/developer shall obtain from the appropriate county department of environmental health a permit for each lot prior to any construction on the property. The permit shall establish the maximum size dwelling and the specific location of the primary and the secondary disposal areas. Owner/developer shall not do any construction or mutilation (cutting or filling) of the so designated primary and secondary disposal area without the prior approval of the appropriate county department of environmental health.

_____ _____

Date Authorized Representative of County Department of Environmental Health

*Planning commission will accept substitute or additional language of the county department of environmental health.

5. ***CERTIFICATION OF STREETS***

I certify that streets and related appurtenances installed, or proposed for installation along with the financial guarantee provided, fully meet the specifications established by the Bean Station Municipal Planning Commission.

_____ _____

Date Authorized Representative of City

6. ***CERTIFICATE OF APPROVAL OF STREET NAME(S)***

I certify the street names on this plat have been reviewed and are acceptable in accordance with the policies of the Grainger County Communications District.

_____ _____

Date Authorized Representative of Grainger County Communications District

7. ***CERTIFICATE OF APPROVAL FOR RECORDING***

I certify that this plat has been found to comply with the subdivision regulations for the City of Bean Station, with the exception of such variances, if any, which are noted in the minutes of the Bean Station Municipal Planning Commission. All improvements have been installed or an acceptable surety posted in order to assure completion. This plat is approved for recording in the office of the county register of deeds.

_____ _____

Date Secretary, Bean Station Municipal Planning Commission

ARTICLE III

GENERAL REQUIREMENTS AND MINIMUM STANDARDS OF DESIGN

A. *Streets*

1. *Conformity to the Major Road Plan*

   The location and width of all streets and roads shall conform to the official major road plan adopted by the planning commission.

2. *Relation to Adjoining Street System*

   The proposed street system shall extend existing streets. They shall be extended at a width no less than the required minimum width as set forth in this Article or the width of the existing street or road whichever is greater.

3. *Streets to Subdivision Boundaries*

   Streets or right-of-way shall, at the discretion of the planning commission, be extended to the property boundary to allow for the development of a coordinated community street system (see 14 below). There shall be no reserve strips controlling access to streets or public utilities.

4. *Streets Within Flood Hazard Areas*

   No street shall be approved in a flood hazard area unless it is at least one (1) foot above the base flood elevation, as defined in Section F of this Article, and the plans for such are part of the stormwater management plan (see Article IV, B). The planning commission shall require profiles and elevations of streets in areas subject to flood in accordance with these and any other applicable regulations, including the Bean Station flood damage prevention ordinance. Fill may be used for streets provided such fill does not increase flood heights. In addition, the street pattern shall be designed so that in time of flood each lot shall be readily accessible to emergency vehicles.

5. *Street Right-of-Way Widths*

The minimum width of right-of-way, measured from lot line to lot line, shall be as shown on the major road plan, or if not shown on such plan, shall not be less than as follows:

a. *Arterial Streets or Highways* — 80 feet, or as may be required.

Streets used primarily for fast or heavy traffic and to move traffic through and outside of the city.

b.(i)

Major Collector Streets — 60 feet

Streets generally used to collect traffic from minor collector and local streets and to provide access to arterial streets for movement through and outside of the community. With appropriate site planning, such as frontage roads, joint use driveways, connecting parking areas, etc., major collectors may be used to provide access to land uses which usually generate high traffic volumes.

b.(ii)

Minor Collector Streets — 50 feet

Streets generally used to collect traffic from local streets and to provide access to major collector and arterial streets and/or to provide adequate access to land uses which generate somewhat higher traffic volumes than local streets.

c. *Local Streets* — 50 feet

Streets generally used to provide access to abutting low density residential uses and other land uses which usually generate low traffic volumes.

d. *Cul-de-sac Streets* — 50 feet

Streets designed to temporarily or permanently restrict through traffic (see 14 below).

e. *Marginal Access Streets* 50 feet

Marginal access streets are minor streets which are parallel to and adjacent to collector or arterial streets and highways which provide access to abutting properties and protection from through traffic.

6. *Additional Width on Existing Streets*

Subdivisions that adjoin existing streets shall dedicate additional right-of-way to meet the above minimum street width requirements.

a. The entire right-of-way shall be provided where any part of the subdivision is on both sides of the existing street.

b. When the subdivision is located on only one side of an existing street, one-half of the required right-of-way, measured from the centerline of the existing roadway, shall be provided.

7. *Restriction of Access to Collector and Arterial Streets*

Where a subdivision abuts or contains an existing or proposed collector or arterial street, the planning commission may require marginal access streets, reverse frontage with screen planting contained in a non-access reservation along the rear property line, or such other treatment as may be necessary to restrict the points of access onto such street in order to adequately protect both the safety of the traveling public and adjoining residential properties.

8. *Street Grades*

Grades on arterial and major collector streets shall not exceed seven (7) percent. Grades on other streets shall not exceed ten (10) percent.

9. *Horizontal Curves*

Where a deflection angle of more than ten (10) degrees in the alignment of a street occurs, a curve of reasonably long radius shall be introduced. On streets sixty (60) feet or more in width, the centerline radius of curvature shall be not less than three hundred (300) feet and on other streets not less than one hundred (100) feet.

10. *Vertical Curves*

Every change in grade shall be connected by a vertical curve constructed so as to afford a minimum sight distance of two hundred (200) feet, said distance being measured from the driver's eyes, which are assumed to be four and one-half (4-1/2) feet above the pavement surface, to an object four (4) inches high on the pavement. Profiles of all roads showing natural and finished grades drawn to a scale of not less than one (1) inch equals one hundred (100) feet horizontal, and one (1) inch equals twenty (20) feet vertical, shall be required and submitted at the time preliminary plat approval is requested.

11. *Tangents*

A tangent of at least one hundred (100) feet in length shall be introduced between reverse curves on arterial and collector streets.

12. *Intersections*

Street intersections shall be as nearly at right angles as is possible. No intersection, however, shall be at an angle of less than sixty (60) degrees.

Property line radii at street intersections shall not be less than twenty (20) feet, except that where the angle of street intersection is less than seventy-five (75) degrees, a greater curb radius may be required. Wherever necessary to permit the construction of a curb having a desirable radius without reducing the sidewalk at a street corner to less than normal width, the property line at such street corner shall be rounded or otherwise set back sufficiently to permit such construction.

13. *Street Jogs*

Street jogs with centerline offsets of less than one hundred twenty-five (125) feet shall not be allowed.

14. *Cul-de-sac Streets (Permanent and Temporary)*

a. Minor terminal streets or courts designed to have one end permanently closed shall be no more than six hundred (600) feet long unless necessitated by topography, as measured along the centerline of such street from the entrance street right-of-way to the center of the turnaround. Such streets shall be provided at the closed end with a turnaround having an outside roadway diameter of at least eighty (80)

feet and a street right-of-way diameter of at least one hundred (100) feet. Where warranted, the planning commission may approve an alternate turnaround design, such as a "T" turnaround.

b. Where, in the opinion of the planning commission, it is desirable to provide for future street access to adjoining property, proposed streets shall be extended to the boundary of such property. Such streets shall be provided with a temporary turnaround having a roadway diameter of at least eighty (80) feet.

15. *Permanent Easements and Reserve Strips*

Every lot in subdivided property shall be served from a publicly dedicated street or a permanent easement. All permanent easements shall be designed and constructed to the same standards, as established in Article IV, as streets being dedicated for public acceptance. All improvements shall conform to standards for minor residential streets as specified in these regulations, except that, street identification signs for permanent easements shall indicate in a recognizable fashion that the easement is not a public street. The final plat of any subdivision containing a permanent easement shall clearly indicate it is not a city street and shall be accompanied by the necessary legal documents to establish a means for continuing maintenance. This may be a property owners association or some other means which the city attorney finds acceptable. A copy of such legal documents shall be forwarded to the planning staff within twenty-four (24) hours of being recorded in the Grainger County Register of Deeds office and shall bear the recorder's stamp. Failure to provide such documents shall be grounds to file for an injunction to prevent the sale or transfer of such property until the required documentation has been provided to the planning staff. There shall be no reserve strips controlling access to streets, except where the control of such strips is definitely placed with the city under conditions approved by the planning commission.

16. *Street Names*

Proposed streets which are obviously in alignment with others already existing and named shall bear the names of existing streets. In no case shall the name for proposed streets duplicate existing street names, irrespective of a difference in the proposed suffix such as "street", "avenue", "boulevard", "drive", "place", "court", or "way". The planning commission can assist the subdivider in avoiding duplication during preparation of the preliminary plat. All final plats

must bear the certificate of approval of the street name(s) from the Grainger County Emergency Communications District.

B. Blocks

1. *Length*

Blocks shall not be less than four hundred (400) nor more than twelve hundred (1200) feet in length, except as the planning commission considers necessary to secure efficient use of land or desired features of street pattern. In blocks over eight hundred (800) feet in length the planning commission may require one (1) or more public crosswalks of not less than ten (10) feet in width to extend entirely across the block at locations deemed necessary.

2. *Width*

Blocks shall be wide enough to allow two (2) rows of lots, except where reverse frontage on major streets and roads is provided or where prevented by topographical conditions or size of the property.

C. Lots

1. *Adequate Building Sites*

Each lot shall contain an adequate building site outside of any easements, street right-of-ways, building setback lines, and subsurface wastewater systems, including future duplication areas for such systems.

2. *Arrangement*

Insofar as practical, side lot lines shall be at right angles to straight street lines or radial to curved street lines. Each lot must front for a minimum fifty (50) feet upon a public street or permanent private easement (see Article III, A, 15) and must meet the width at the building setback line requirement for the zoning district within which the subdivision is located. No lot shall have a depth that exceeds four times the road frontage of said lot. Depth of each lot being defined as the distance from the road providing access to said lot to the rear lot line of said lot. (Amended by Resolution 00-01 6/26/2000)

3. *Minimum size*

a. All lots which are served by public water and public sewer, other than those not intended for development, shall conform to the lot size, lot

width, and setbacks of the zoning district within which they are located.

b. Residential lots served by public water but located in areas in which a sanitary sewer system is not available and subsurface wastewater disposal systems or similar systems are planned shall not be less than one hundred (100) feet wide at the building setback line or less than twenty thousand (20,000) square feet in area. Greater area may be required by the planning commission as indicated by data from percolation tests and investigations or as recommended by the county department of environmental health.

c. Residential lots not served by a public water system shall not be generally permitted. In considering a request for a variance from this section, the planning commission shall consider the proposed subdivision's location relative to any existing or planned public water system improvements, potential for resubdivision, and fire safety. In no instance, however, shall the planning commission consider a request for variance from the provisions of this section where the subdivision contains two (2) or more lots that are less than one (1) acre in size and less than one hundred twenty-five (125) feet in width at the building setback line.

d. Size of properties reserved or laid out for commercial or industrial properties shall be adequate to provide for the off-street service and parking facilities required by the type of use and development contemplated. Platting of individual lots should be avoided in favor of an overall design of the land to be used for such purposes.

e. The size and width of lots shall in no case be less than the minimum requirements of any zoning ordinance in effect.

4. *Building Setback Lines*

a. The minimum depth of building setback lines from the street right-of-way line shall not be less than twenty-five (25) feet from local streets and minor collector streets, including marginal access streets and thirty-five (35) feet from major collector streets and arterial streets unless a greater distance is deemed to be necessary by the planning commission or required by the zoning district regulations.

b. In the case of electric transmission lines where easement widths are not definitely established, there shall be a minimum building setback line from the center of the transmission line as follows:

Voltage of Line	Minimum Building Setback
46 KV	37-1/2 feet
69 KV	50 feet
161 KV and over	75 feet

5. *Corner Lots*

Corner lots shall have extra width sufficient to permit the additional side yard area as may be required by Article IV, 403, of the Bean Station zoning ordinance.

D. Public Use and Service Areas

Due consideration shall be given to the allocation of areas suitably located and of adequate size for playgrounds and parks for local or neighborhood use as well as public service areas.

1. *Public Open Spaces*

Where a school, neighborhood park, recreation area, or public access to water frontage is shown on an official map or in a plan made and adopted by the planning commission and is located in whole or in part in the applicant's subdivision, the planning commission may require the dedication or reservation of such open space within the subdivision up to and including a total of ten (10) percent of the gross area or water frontage of the plot for park, school, or recreation purposes.

2. *Easements for Utilities*

Except where alleys are permitted for the purpose, the planning commission may require easements of at least five (5) feet in width for poles, wires, conduits, storm and sanitary sewers, gas, water mains, or other utility lines along rear lot lines or side lot lines if, in the opinion of the planning commission such action is desirable. Easements of the same or greater width may be required along the lines of or across lots, where necessary for the extension of existing or planned utilities.

3. *Easements for Drainage*

Where a subdivision or lot is traversed by a watercourse, drainageway, channel, or stream there shall be provided a stormwater easement or drainage right-of-way for the purpose of widening, deepening, relocating, improving, or protecting such drainage easement.

4. *Community Assets*

In all subdivisions, due regard shall be shown for natural features, such as large trees and watercourses, historical sites, and similar community assets which, if preserved, will add attractiveness and value to the property.

E. Suitability of the Land

Land which the planning commission has found to be unsuitable for subdivision due to flooding, poor drainage, steep slopes, rock formation, or lack of adequate infrastructure, shall not be subdivided unless adequate methods are employed by the developer for meeting the problems which would be created by the subdivision of such land in order that the health, safety, and welfare of lot purchasers and the community at large may be protected.

F. Land Subject to Flooding

Land subject to flooding as identified on the Federal Emergency Management Agency's Flood Insurance Rate Maps (FIRM) shall be identified on the plat. A note shall be placed on the final plat stating that development within the flood hazard area is subject to the most recent requirements adopted by the city pertaining to development in the floodplain, which comply with minimum requirements under the National Flood Insurance Program, and shall be adhered to as part of the subdivision regulations, at the time a flood damage prevention ordinance is adopted.

G. Large Tracts or Parcels

When land is subdivided into larger parcels than ordinary building lots, such parcels shall be arranged so as to allow for the opening of streets in the future and for logical resubdivision.

H. Variances

Variances to the provisions of these regulations may be granted by the planning commission so long as the intent of these regulations can be preserved when it finds that strict application of these regulations would create unnecessary hardship. Such hardship shall be found to be due to the

technical impracticality of the application of these regulations due to the topography, natural conditions, location, or unusual shape of a property which were not created by actions of the property owner. The planning commission may attach reasonable conditions to any such variance granted to preserve the intent of these regulations and to protect the general health, safety, and welfare of surrounding property and the community.

I. Planned Unit Developments

Any subdivision in which individual lots are proposed to be smaller than the minimum size set out in these regulations or the minimum size allowed in the zoning district within which such subdivision is located *may* be permitted by the planning commission as a planned unit development (PUD). The overall project density, however, shall be no greater than that permitted in Article III, C, 3. In addition to the plat preparation requirements and required improvement standards set out in these regulations, any subdivision developed as a planned unit development shall also meet all applicable standards of the Bean Station Zoning Ordinance concerning planned unit developments. The subdivider shall consult with the planning staff prior to beginning preparation of a PUD.

J. Zoning or Other Regulations

No final plat of land will be approved unless it conforms to applicable provisions of the Bean Station Zoning Ordinance. Whenever there is a discrepancy between minimum standards or dimensions noted herein and those contained in the zoning ordinance, building code, or other governmental regulations, the highest standard shall prevail.

ARTICLE IV

DEVELOPMENT PREREQUISITE TO FINAL APPROVAL

Prior to presenting a plat for final approval, the improvements set out in this article shall be installed and approved by the appropriate person or agency, or, a financial guarantee shall be provided to insure installation of all required improvements.

A. Monuments or Corner Markers

1. Flat top iron pins of not less than one-half (1/2) inch diameter and eighteen (18) inches long shall be set at all points where the street lines intersect the exterior boundaries of the subdivision, and, at angle points and points of curve in each street. The top of the iron pins shall have a cap or tag of noncorosive material with the surveyor's registration number or company name stamped thereon.

2. All other lot corners shall be marked with iron pins not less than one-half (1/2) inch in diameter and eighteen (18) inches long.

B. Stormwater Control

1. *Erosion Control and Drainage Plan*

A complete erosion control and drainage plan prepared by an engineer or landscape architect licensed to practice in the State of Tennessee with competency in this field shall be submitted with the preliminary plat for any single family residential development containing five (5) acres, or more, *or,* ten (10) lots, or more. Preliminary plats of subdivisions containing less than five (5) acres *and* fewer than ten (10) lots shall address the method of erosion control and stormwater management, but shall not be required to meet the specific standards set out in subsections a. and b. below unless deemed necessary by the planning commission.

a. *Erosion Control Plan*

The erosion control plan shall show the location and address the manner of installation and maintenance of appropriate and generally accepted means to prevent eroded soils or other materials from being deposited in any stream or other body of water or onto adjoining properties, including public right-of-way. During street construction, measures outlined in Section 209, Temporary Project Water

Pollution Control, Standard Specifications for Road and Bridge Construction, Tennessee Department of Transportation, shall be employed. If applicable, the erosion control plan shall include a copy of the "Notice of Intent" form which the subdivider may have been required to file with the Tennessee Department of Environment and Conservation regarding erosion control on construction sites. Erosion control measures shall be installed prior to site preparation activities and maintained during construction of streets and other public facilities and until all areas disturbed by construction activities have been stabilized in an appropriate manner.

b. *Drainage Plan*

The drainage plan shall be designed using methods outlined in the most recent edition of "Urban Hydrology for Watersheds", Technical Release #55, U. S. Soil Conservation Service or other methods deemed acceptable by the planning commission. The plan shall be designed so that stormwater runoff from a 10-year, 24 hour storm event under post development conditions will be detained on site and released from the site at a rate no greater than that which occurred on site during a 10-year, 24 hour storm event prior to development. Where detention structures are proposed as a part of the stormwater management plan, an emergency spillway shall be provided for each such structure. All permanent drainage structures, easements, etc., shall be shown on the plan and the developer shall provide information on the manner in which such structure, easements, etc., will be maintained over time.

2. *Driveway Drainage System Design Criteria*

Any driveways installed by the subdivider prior to the date a street is offered to the city for acceptance into the city street system or installed on any other approved private means of access shall meet the following standards, as applicable:

a. *Streets or Internal Drives Without Curbs*

For driveways serving individual single family homes, the building official shall determine the type and minimum pipe size which shall be at least a pipe of galvanized steel no less than fifteen (15) inches in diameter. Where the proposed development includes internal driveways serving other than individual single family lots, driveway side drains shall be a minimum of 16 gauge for corrugated metal

pipe (CMP), or class III concrete for pipe diameters to 18". For pipe 24" in diameter or larger, the CMP shall be 14 gauge or class III concrete. Pipe shall extend beyond the edges of the driveway and shall terminate with a concrete flared headwall (see illustrations 1 & 2). No pipe shall be installed which is less than 15" in diameter. The city street superintendent shall have the authority to approve and alternative headwall design suitable to the site in question.

b. *Streets With Curbs*

Catch basins shall be integrated into any new street construction where curbing will be installed. Catch basins shall be TDOT 12-32 (standard drawing D-CB-12-32) modified to accept the frame and grate as shown on standard drawing D-CBB-12A or other designs of comparable quality as approved by the city. Total casting weight shall be a minimum of 730 lbs. per catch basin. Castings shall be aligned using plan normal gutter elevations which shall be adjusted to allow for a 2' sump at face of curb. Enclosed storm drains which collect and convey drainage on, across, and through public rights-of-way shall comply with standards for driveway side drains. Pipe shall extend beyond the right-of-way and shall terminate with a flared concrete headwall (see illustrations 1 & 2). Rip rap/quarry or field stone 4" to 8" shall be placed a minimum of 6' beyond the headwall and laid over erosion control matting material equal to Erosion Control Fabric 955 by Synthetic Industries Inc. The minimum design criteria used for calculating the size of enclosed drainage systems shall be based on a ten-year (10) flood frequency, 24 hour duration storm. For major system designs, the city engineer and development engineer shall determine other appropriate criteria which is consistent with the intent of this section.

C. Street Design Standards

1. *General Provisions*

These design standards shall be considered *minimum standards*. The planning commission may apply a higher standard when deemed appropriate, such as but not limited to, construction of streets within industrial subdivisions.

After removal of topsoil and other materials from the right-of-way, in accordance with Section 201, Clearing and Grubbing and Section 202, Removal of Structures and Obstructions, Standard Specifications for Road and

Bridge Construction, Tennessee Department of Transportation, but ***prior to any grading or filling, the subdivider shall be responsible for obtaining the services of an independent street testing firm and notifying that firm at each stage an inspection or test is required in accordance with the street testing schedule set out in Appendix II of these regulations.*** Copies of test results shall be submitted after each inspection/test to the street superintendent and planning staff.

2. *Grading*

All streets, roads, and alleys shall be graded by the subdivider so that pavement and sidewalks can be constructed to the required cross-section. Deviation from the above due to special topographical conditions, will be allowed only with special approval of the planning commission. Measures outlined in Section 209, Temporary Project Water Pollution Control, Standard Specifications for Road and Bridge Construction, Tennessee Department of Transportation, shall be employed during all phases of street construction. Where streets are constructed under or adjacent to existing electric transmission lines, the nearest edge of the pavement shall be a minimum of fifteen (15) feet from any transmission line structure and all grading for the street shall be done in a manner which will not disturb the structure or result in erosion endangering the structure. In the case of electric transmission lines, the clearance from the pavement to the nearest conductor shall meet the requirements of the National Electrical Safety Code.

3. *Preparation for and Construction of Subgrade*

Preparation and construction of the subgrade shall be accomplished in accordance with Section 203, Excavation and Undercutting, Section 205, Embankments, and Section 207, Subgrade Construction and Preparation, Standard Specifications for Road and Bridge Construction, Tennessee Department of Transportation. The density of the finished subgrade shall be equal to not less than one hundred percent (100%) of the maximum density. The determination of optimum moisture, maximum density, and density of the soil in place shall be in accordance with the provisions of subsection 205.04. of the above referenced publication.

4. *Pavement Base*

After the subgrade has been inspected and found to meet the standard set out in Section 3 above, the roadbed shall be surfaced with Type A mineral aggregate crushed stone, pugmill mixed with even wetting to maintain a uniform moisture content, in accordance with Section 303, Mineral Aggregate Base, Standard Specifications for Road and Bridge Construction, Tennessee Department of Transportation, applied in reasonably close conformity with the lines, grades, thickness, and typical cross sections shown on the street plan/profile. The average density shall not be less than ninety-five percent (95%) of maximum density determined in accordance with AASHTO T 99, Method D. No individual test shall be less than ninety-two (92%) percent of maximum density. The compacted thickness of the stone roadway shall be dependent upon the classification of the street, as follows:

Local Streets - 8"
Minor and Major Collector and Arterial Streets - 8"

5. *Prime Coat*

After the pavement base has been inspected and found to meet the standard set out in Section 4 above, a prime coat of cut-back asphalt, Grade RC-70 or RC-250, or, emulsified asphalt, Grade AE-P or CAE-P, shall be applied at a rate of 0.2 to 0.5 gallons per square yard, and, if conditions require, aggregate cover material, Size 7, 8, or 78, shall be applied. All work shall be accomplished in accordance with Section 402, Prime Coat, Standard Specifications for Road and Bridge Construction, Tennessee Department of Transportation.

6. *Binder*

Following completion and inspection of the subgrade, base, and prime coat, a binder course consisting of hot mix asphaltic concrete (307-B), shall be applied to a depth of two and one-half inches (2 1/2"). The binder course shall be applied in accordance with Section 307, Bituminous Plant Mix Base (Hot Mix), Standard Specifications for Road and Bridge Construction, Tennessee Department of Transportation and in reasonably close conformity with the lines, grades, thickness, and typical cross sections shown on the street plan/profile. (Amended by Resolution 2008-08, 8/25/2008)

7. *Wearing Surface*

Upon completion and inspection of the binder, the wearing surface shall be applied. The wearing surface shall be asphaltic concrete, as set out in Section 411, Asphaltic Concrete Surface (Hot Mix), Standard Specifications for Road and Bridge Construction, Tennessee Department of Transportation, measured and applied as set out in Section 407, Bituminous Plant Mix Pavements (General), Standard Specifications for Road and Bridge Construction, Tennessee Department of Transportation, and shall be applied in accordance with the type under contract and in reasonably close conformity with the lines, grades, typical cross sections, and rate of application or thickness as shown on the street plan/profile. Asphaltic concrete shall be applied to the following depths:

Local Streets - 2"
Minor and Major Collector and Arterial Streets - 2"

8. *Minimum Pavement Widths and Cross Section*

Minimum pavement widths between curbs shall be as follows:

Local Streets	26 feet
Minor and Major Collector Streets	28 to 32 *feet*
Arterial Streets	As may be required*

*Arterial Streets are generally constructed by public entities, but where the subdivision of property occurs along an arterial street, developers may be required to provide acceleration/deceleration lanes, or similar improvements.

See illustration 3 in appendix for typical roadway section.

9. *Shoulders and Ditches and Curbs and Gutters*

The subdivider shall provide either a system of shoulders and ditches or permanent six (6) inch concrete curbs with twenty-four (24) inch integral concrete gutters, standard rolled curb and gutters, or other construction approved by the planning commission. Either such system shall be designed in accordance with the stormwater management plan for the subdivision (see

Article IV, B). All manholes, catch basins, inlets, and pipe end walls specified in the street plan/profile shall be installed in accordance with the provisions of Section 611, Manhole, Catch Basins, Inlets, and Pipe End Wall, Standard Specifications for Road and Bridge Construction, Tennessee Department of Transportation. If shoulders and ditches are used, applicable provisions of Section 206, Final Dressing, and, Section 208, Shoulders and Ditches, Standard Specifications for Road and Bridge Construction, Tennessee Department of Transportation, shall be followed.

10. *Inspection*

During the construction of subdivision streets which are intended to become public streets to be maintained by the City of Bean Station, the developer and/or his contractor shall be required to keep the street superintendent advised as to the progress being made and have all such streets inspected/tested by an independent street testing firm at all stages of preparation and construction (see Appendix II, Street Testing Schedule).

If final plat approval is requested prior to the completion of required street improvements, the planning commission shall ask the advice of the street superintendent and have on file all inspection/testing reports of the independent street testing firm completed to that point before determining the amount and type of security which will be required to guarantee completion of the street. If approved, the planning commission shall not release such guarantee until a recommendation is received from the street superintendent and a certification letter from the independent street testing firm is obtained regarding whether or not all improvements have been installed in accordance with applicable provisions of these regulations.

D. Sidewalks

For the safety of pedestrians and of children at play, installation of sidewalks on both sides of streets will be encouraged by the planning commission to be installed by the developer. Sidewalks, if constructed, shall be located not less than one (1) foot from the property line to prevent interference or encroachment by fencing, walls, hedges, or other planting or structures placed on the property line at a later date. In single-family residential areas, concrete sidewalks shall be four (4) feet wide and four (4) inches thick. In multi-family or group housing developments, sidewalks shall be five (5) feet wide and four (4) inches thick. In commercial areas, sidewalks shall be ten (10) feet wide and four (4) inches thick.

E. Installation of Utilities and Driveways

After grading is completed and approved and before any base is applied, all of the underground works, e. g., water mains, gas mains, etc., and all service connections shall be installed completely and approved throughout the length of the street and across the flat section. All driveways for houses to be built by the subdivider shall be cut and drained. (see Article IV, B, 2)

F. Water Supply System

A water supply system shall be constructed to serve all lots shown on the subdivision plat with water for both domestic use and fire protection. Fire hydrants shall be installed so that no lot is more than 500' from an operable hydrant.

G. Sanitary Sewers

When a proposed subdivision is located within a sewer service area, sanitary sewers shall be installed.

H. Street Name Signs and Traffic Control Signs

Street name signs shall be installed at all intersections in new subdivisions including intersections with existing city streets. Appropriate traffic control signs shall be installed in accordance with the recommendation of the planning commission and city street superintendent. Such signs shall conform to Uniform Traffic Control Manual guidelines.

I. Requirements for Acceleration and Deceleration Lanes

In order to provide for the safe and orderly movement of traffic on existing streets, the planning commission may require a developer to construct such lanes for acceleration and deceleration as may be appropriate. The planning commission's decision will be based upon the existing street widths, average daily traffic, and safety conditions of the area.

J. Electric Transmission Lines

The subdivider shall provide the necessary major electric transmission lines throughout the subdivision. The system shall be constructed to serve all lots shown on the subdivision plat. When feasible, lines should be run either along adjoining rear lot lines or underground in order to avoid construction of power lines and poles along the public rights-of-way.

K. Street Lights

Street lights shall be installed along existing or new streets serving the subdivision at street intersections and at intervals of 500' from such intersections along the length of the street.

L. Guarantee in Lieu of Completed Improvements

No final subdivision plat shall be approved by the planning commission or accepted for record by the county register of deeds until all required improvements have been constructed in a satisfactory manner and approved by the planning commission. If all required improvements have not been installed and approved at the time final plat approval is requested, the planning commission *may*, if it deems it to be appropriate, accept a performance bond from an approved surety or a letter of credit from an approved financial institution. Other forms of financial guarantee such as a certified check or escrow account, may be accepted upon review and approval of the city attorney. The amount of the bond or other security shall be sufficient to cover the cost of installation of the required improvements plus ten (10) percent of such cost, in order to insure that required public improvements may be made and utilities installed without cost to the City of Bean Station in the event of default of the subdivider. The conditions of such security or performance bond shall provide for the installation of the improvements covered by such bond within a period of not to exceed twelve (12) months; provided however, that such period may be extended by the planning commission with the consent of the parties thereto if the planning commission finds that the public interest will not be adversely affected by such extension. If the planning commission shall decide at any time during the term of the performance bond that the extent of the building development that has taken place in the subdivision is not sufficient to warrant all the improvements covered by such performance bond, that required improvements have been installed as provided in this section in sufficient amount to warrant reduction in the face amount of said bond, or that the character and the extent of such development require additional improvements, the face value of such performance bond shall thereupon be reduced or increased by an appropriate amount so that the new face amount will cover the cost in full of the amended list of improvements. Any owner or agent of any land may sell, transfer, or agree to sell any lot or lots shown on a plat having been granted final approval by the planning commission, provided the owner or agent post an acceptable performance or security bond guaranteeing to the public the actual construction and installation of the necessary improvements within the specified time period. Sale of subdivision by auction does not exempt the subdivider from posting acceptable security in

lieu of completed improvements, except that, if a parcel is sold as a whole, the security or performance bond may be released by the planning commission upon action by the purchaser to consolidate the various lots into one parcel.

M. Maintenance/Warranty Bond

In addition to the requirements of Section 4(L) above, prior to the release of any financial guarantee for road construction, a maintenance/warranty bond shall be required that will provide funds for any needed improvements, in case of damage and/or deterioration prior to acceptance as a city road. Prior to formal dedication and acceptance of the road into the city road system, the developer shall post a maintenance/warranty bond assuring the quality of the materials and workmanship effective for at least two (2) years after acceptance. The minimum amount of the bond shall be twenty percent (20%) of the total cost of the road improvements or the pre-construction surety amount previously posted for such improvements, whichever is greater. Within thirty (30) days from the end of the effective date, a final inspection shall occur to assure no problems exist prior to authorizing release of the maintenance/warranty bond. (Amended by Resolution 2010-08, 1/25/2010)

ARTICLE V

ENFORCEMENT AND PENALTIES FOR VIOLATIONS

A. General

The enforcement of these regulations and penalties for the unapproved recordation or transfer of land are provided by state law in the authority granted by Public Acts of the State of Tennessee.

B. Enforcement

1. No plat or plan of a subdivision of land into two or more lots located within the area of planning jurisdiction shall be admitted to the land records of Grainger County or be received or recorded by the register of deeds until said plat or plan has received final approval in writing by the planning commission, as provided in Section 13-4-302, Tennessee Code Annotated.

2. No board, public officer, or authority shall light any street, or lay or authorize the laying of water mains or sewers, or the construction of other facilities or utilities in any street located within the area of the city's planning jurisdiction unless such street shall have been accepted, opened, or otherwise received the legal status of a public street prior to the adoption of these regulations, or unless such street corresponds in its location and lines to a street shown on a subdivision plat approved by the planning commission, as provided in Section 13-4-307, Tennessee Code Annotated.

C. Penalties

1. No county register of deeds shall receive, file, or record a plat of a subdivision within the municipality without the approval of the planning commission as required in Section 13-4-303, Tennessee Code Annotated, and any county register so doing shall be deemed guilty of a misdemeanor, punishable as other misdemeanors as provided by law.

2. Section 13-4-306, Tennessee Code Annotated, provides that whoever being the owner or agent of the owner of any land, transfers or sells or agrees to sell or negotiates to sell, such land by reference to or exhibition of or by other use of a plat of subdivision of such land without having submitted a plat of such subdivision to the planning commission and obtained its approval as required before such plat be recorded in the office of the appropriate county register, shall be deemed guilty of a misdemeanor, punishable as other misdemeanors as provided by the law. The description by

metes and bounds in the instrument of transfer or other document used in the process of selling or transferring shall not exempt the transaction from such penalties. The city, through its municipal attorney or other official designated by the Board of Mayor and Aldermen, may enjoin such transfer or sale or agreement by action for injunction.

3. Any building or structure erected or to be erected in violation of the subdivision regulations shall be deemed an unlawful building or structure, and the building commissioner and/or the city attorney or other official designated by the Board of Mayor and Aldermen may bring action to enjoin such erection or cause it to be vacated or removed as provided in Section 13-4-308, Tennessee Code Annotated.

ARTICLE VI

ADOPTION AND EFFECTIVE DATE

A. Before adoption of these subdivision regulations, a public hearing as required by Section 13-4-303, Tennessee Code Annotated, was afforded any interested person or persons. Notice of such hearing was announced in a local paper, being of general circulation within the area of planning jurisdiction, and stating the time and place for the hearing.

B. These rules and regulations and any amendment thereto shall be in full force and effect from and after their adoption and effective date.

BEAN STATION MUNICIPAL PLANNING COMMISSION

_____
PUBLIC HEARING

_____
ADOPTED

_____
SECRETARY

APPENDICES

APPENDIX I

CEMENT, CONCRETE CURBING AND SIDEWALKS

A. Description

This item shall consist of Portland cement concrete curbs, curbs and gutters, or sidewalks constructed on a prepared subgrade in accordance with these specifications and either of the cross-sections shown. The required width of the base varies with the type of curbing selected:

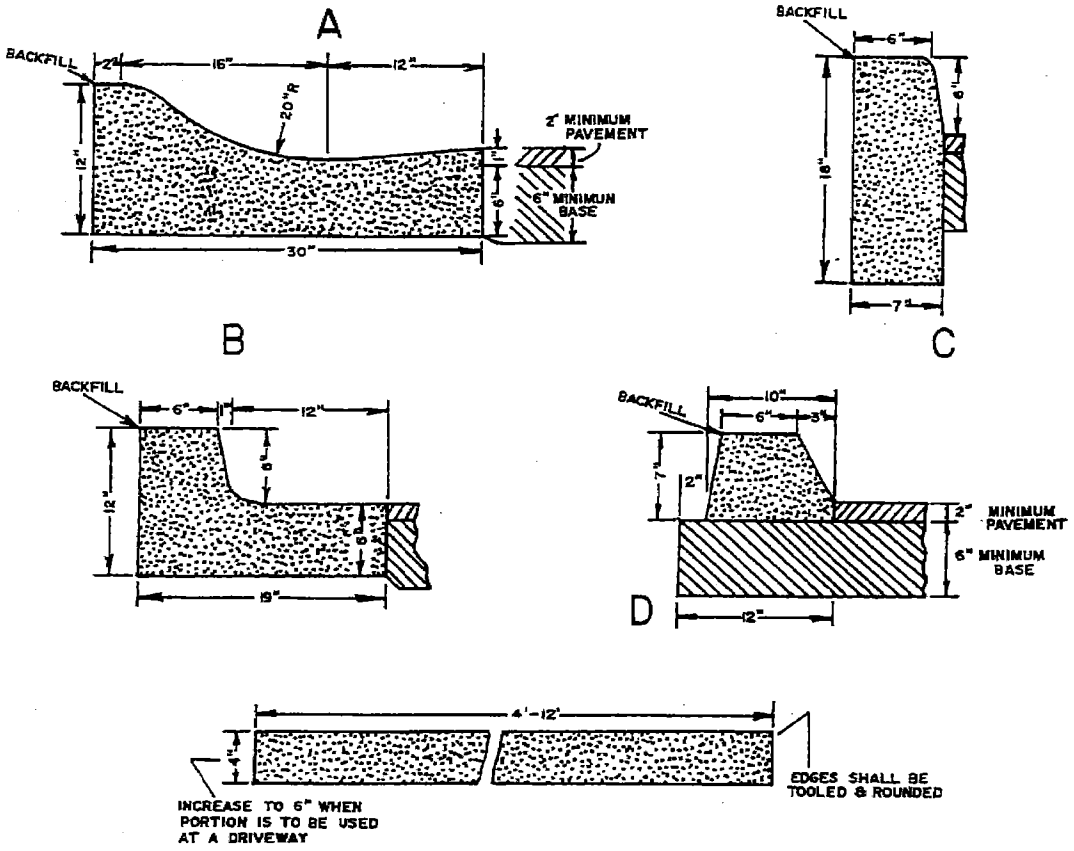

Type A. Base two (2) feet narrower than required pavement width.
Type B. Base two (2) feet narrower than required pavement width.
Type C. Base equal to required pavement width.
Type D. Base two (2) feet wider than required pavement width.

B. Materials

1. Aggregates: Coarse aggregate shall consist of crushed gravel. It shall be clean, hard, tough, durable pieces free from injurious amounts of soft friable, thin, elongated or laminated pieces, soluble salts, organic, or other deleterious matter.

   Fine aggregate shall consist of either a natural sand or a stone sand composed of sound particles of approved stone. All sand shall be free of clay or other adherent coatings and injurious amounts of deleterious matter.

2. Cement: Standard Portland cement and high early strength Portland cement shall meet the requirements of current federal specifications SS-C-192 or equal.

3. Water: Water shall be free from oil, acids, alkali and vegetable matter and shall be clean.

4. Gradation: The aggregate when tested by means of laboratory sieves shall meet the following requirements:

	Percent by Weight Passing Square Mesh Sieve	
Sieve Designation	Coarse Aggregate	Fine Aggregate
1-1/2 inch	100	---
1 inch	95-100	---
1/2 inch	35-70	---
3/8 inch	---	100
No. 4	0-10	95-100
No. 16	---	45-80
No. 50	---	10-30
No. 100	---	2-10

5. Proportions: Concrete shall contain six (6) bags of cement per cubic yard and shall be proportioned in an approximate 1:2:4 mix as follows: Mix with each bag of cement 188 pounds of fine aggregate and 345 pounds of coarse aggregate, using six (6) gallons of water. Weight of aggregates is based on a specific gravity of 2.65. Compressive strength shall be 3,000 pounds per square inch at 28 days.

C. Construction Methods

1. Preparation of Subgrade: All boulders, organic material, soft clay, spongy material, and any other objectionable material shall be removed and replaced with approved material. The subgrade shall be properly shaped, rolled and uniformly compacted to conform with the accepted cross-sections and grades.

2. Forms for Concrete: The forms for the concrete shall be of wood or metal, straight, free from warps or kinks and of sufficient strength. They shall be staked securely enough to resist the pressure of the concrete without spring. When ready for the concrete to be deposited they shall not vary from the approved line and grade and shall be kept so until the concrete has set. Where a face form for a curb is used it shall be so designed as to permit it to be securely fastened to the other forms.

3. Placing and Finishing Concrete: Just prior to placing the concrete, the subgrade (or base) shall be moistened, the concrete mixed to the proper consistency shall be placed in the forms and thoroughly tamped in place so that all honeycombs will be eliminated and sufficient mortar will be brought to the surface. After this the surface shall be brought to the smooth even finish by means of a wooden float. All faces adjacent to the forms shall be spaced so that after the forms are stripped the surface of the faces will be smooth, even and free of honeycomb. All edges shall be tool rounded. Slope sidewalks one quarter (1/4) inch per foot toward the pavement surface.

4. Expansion and Contraction Joints for Concrete: Half-inch (1/2) expansion joints shall be placed at intervals not exceeding sixty (60) feet. At intervals not greater than ten (10) feet nor less than five (5) feet the concrete curb shall be scored for a depth equal to one-third (1/3) the total depth of the concrete. Sidewalks shall be scored to a depth of one (1) inch every four (4) to six (6) feet and at all intersections with curbs or other structures.

5. Curing Concrete: When completed the concrete shall be kept moist for a period of not less than seven (7) days and longer, if necessary, and shall be protected from the elements in a satisfactory manner.

6. Backfilling: Backfill shall be of suitable selected material and shall be placed and tamped in layers of not over six (6) inches in depth until firm and solid. Backfilling shall follow immediately after the concrete forms have been removed, and shall be higher than and

sloped toward the top of the curb to insure surface drainage on the paved surface of the roadway. Paved and "V" type ditches for drainage behind the curb will not be permitted. Slope sidewalk planting strips shall be placed one-quarter (1/4) inch per foot toward the pavement surface.

D. Seasonal Limits

No concrete shall be poured on a frozen or thawing subgrade, or during unfavorable weather conditions, or when the temperature is 38° F. and falling.

APPENDIX II

STREET TESTING SCHEDULE

For the purpose of assuring new streets are constructed in accordance with the street improvement standards contained the Subdivision Regulations of the City of Bean Station, Tennessee, all subdividers constructing streets shall adhere to the street testing schedule contained herein. The subdivider shall choose a testing company from an approved list provided by the Bean Station Municipal Planning Commission. If the subdivider chooses a firm not on the list, evidence of such firm's qualifications and willingness to perform the work required shall be submitted to the planning staff. The subdivider shall contract with the chosen company and bear all costs associated with conducting street tests. Upon completion of street construction, the testing company shall prepare a letter to the planning staff and city street superintendent certifying that the street has been constructed to the required standards.

See following page for street testing schedule.

ROAD TESTING SCHEDULE

CONSTRUCTION PHASE	MATERIAL	TEST	FREQUENCY
After right-of-way boundaries have been staked & roadway cleaned of brush, stumps, top soil, etc.	Soil prior to any cut, fill or grading commencing	Collect soil sample and perform standard proctor test to determine "baseline" soil conditions	Once, after stripping of topsoil
After the placement of any fill (embankment, if applicable)	Suitable fill material	Any test which is generally accepted by the testing industry and the civil engineering profession as yielding reliable results when testing for density/ moisture	One test per 1' of lift (fill) per 1,200 linear feet of roadway
After construction of subgrade	Soil	Any test which is generally accepted by the testing industry and the civil engineering profession as yielding reliable results when testing for density/moisture	One sample every 200 linear feet of roadway collected in random pattern
After installation of curbs	At least machine formed concrete extruded	Visual inspection to determine that curb has been installed in accordance with specifications	Entire length of roadway
Base	Mineral Aggregate	Any test which is generally accepted by the testing industry and the civil engineering profession as yielding reliable results when testing for density/moisture	One every 200 linear feet of roadway collected in a random pattern
Riding Surface	Plant Mix Asphalt	Any test which is generally accepted by the testing industry and the civil engineering profession as yielding reliable results when testing for density/ moisture	Representative of testing company to be present when mix arrives at site and during the installation of the riding surfaces, and shall conduct tests every 200 linear feet in a random fashion to assure the material is of the quality specified and is being applied to the depth and density specified.
After completion of all construction		The testing company shall prepare a letter to the planning commission and county highway superintendent certifying that the road has been built to specifications.	

ILLUSTRATION 1

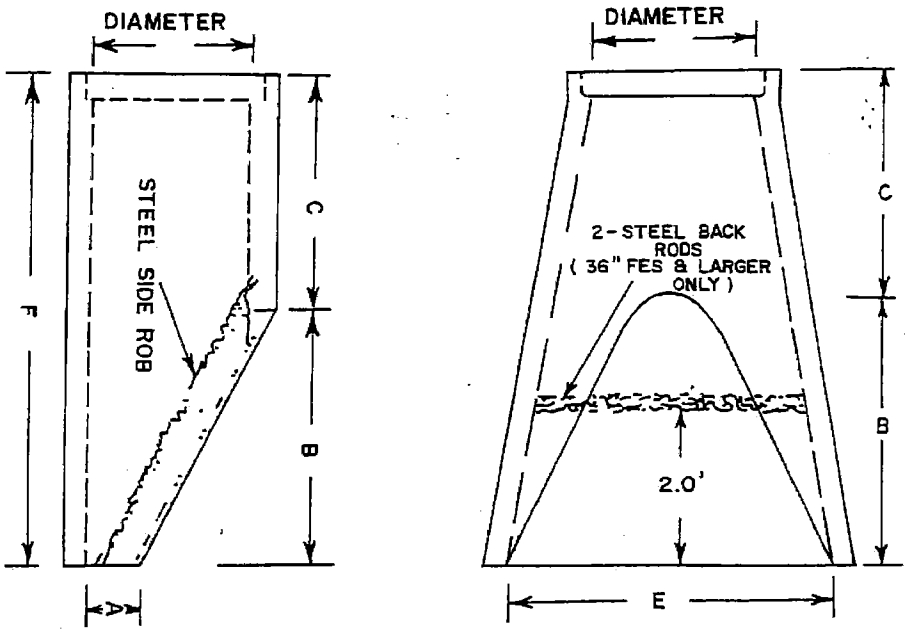

STANDARD DESIGN
FOR DRIVE WAY SIDE DRAINS
AS REQUIRED

REINFORCED CONCRETE
FLARED END SECTION DETAILS

ILLUSTRATION 2

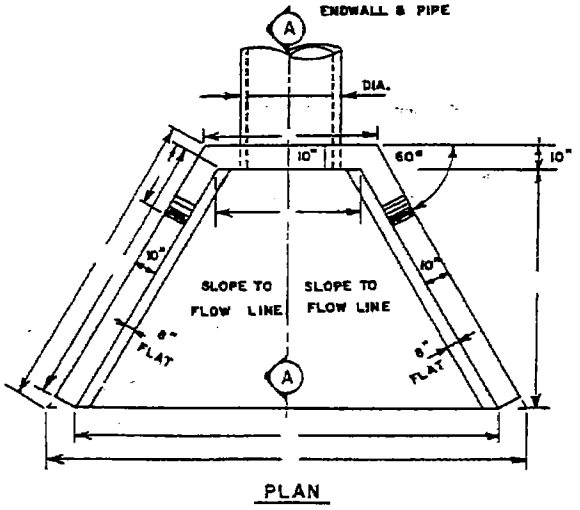

PLAN

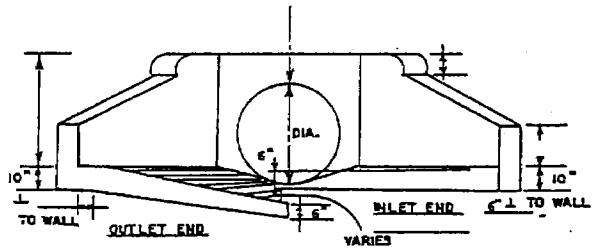

ELEVATION A

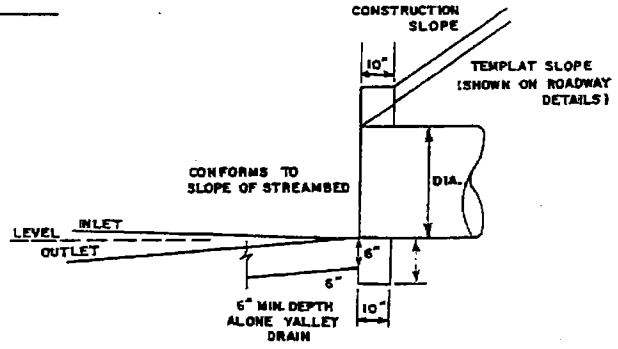

SECTION A-A

STANDARD DESIGN
FOR MAJOR STORM WATER APPURTENANCES
AS REQUIRED

CULVERT HEADWALL DETAILS

ILLUSTRATION 3

TYPICAL ROADWAY SECTION W/CURBING

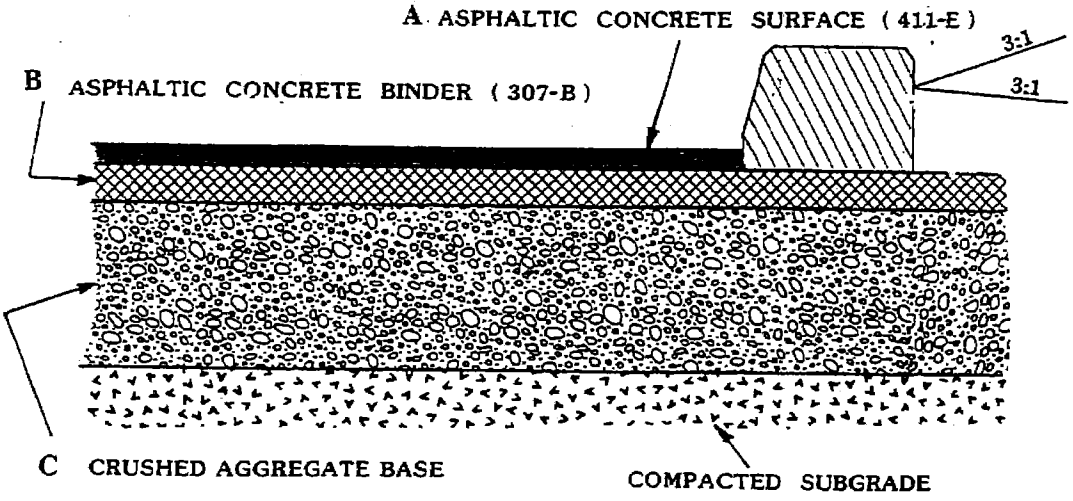

ROADWAY STANDARDS

	(A) SURFACE	(B) BINDER	(C) BASE
LOCAL STREETS	2.0"	1.5"	8.0"
MINOR/MAJOR COLLECTOR & ARTERIAL STREETS	2.0"	1.5"	8.0"